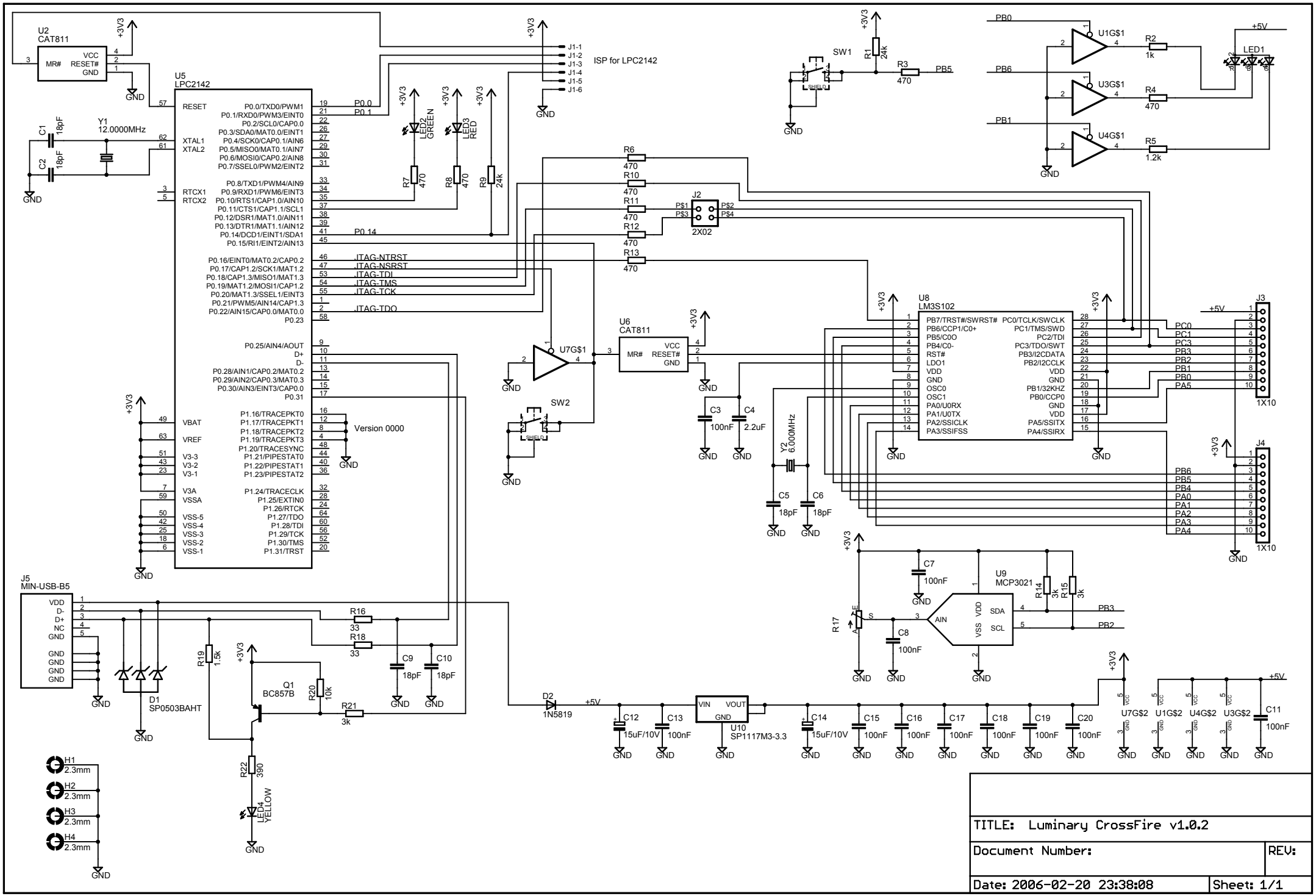
U2
CAT811
MR#
VCC
RESET#
GND
U5
LPC2142
ISP for LPC2142
J1-1
J1-2
J1-3
J1-4
J1-5
J1-6
Y1
12.0000MHz
C1
18pF
C2
18pF
LED2
GREEN
LED3
RED
R7
470
R8
470
R9
24k
R6
470
R10
470
R11
470
R12
470
R13
470
J2
2X02
U7G$1
U6
CAT811
SW2
SW1
R1
24k
R3
470
PB5
PB0
PB6
PB1
U1G$1
U3G$1
U4G$1
R2
1k
R4
470
R5
1.2k
LED1
+5V
U8
LM3S102
PB7/TRST#/SWRST#
PB6/CCP1/C0+
PB5/C0O
PB4/C0-
RST#
LDO1
VDD
GND
OSC0
OSC1
PA0/U0RX
PA1/U0TX
PA2/SSICLK
PA3/SSIFSS
PC0/TCLK/SWCLK
PC1/TMS/SWD
PC2/TDI
PC3/TDO/SWT
PB3/I2CDATA
PB2/I2CCLK
PB1/32KHZ
PB0/CCP0
PA5/SSITX
PA4/SSIRX
J3
1X10
J4
1X10
C3
100nF
C4
2.2uF
Y2
6.000MHz
C5
18pF
C6
18pF
U9
MCP3021
C7
100nF
C8
100nF
R14
3k
R15
3k
R17
J5
MIN-USB-B5
VDD
D-
D+
NC
GND
R16
33
R18
33
C9
18pF
C10
18pF
D1
SP0503BAHT
R19
1.5k
Q1
BC857B
R20
10k
R21
3k
R22
390
LED4
YELLOW
D2
1N5819
C12
15uF/10V
C13
100nF
U10
SP1117M3-3.3
VIN
VOUT
C14
15uF/10V
C15
100nF
C16
100nF
C17
100nF
C18
100nF
C19
100nF
C20
100nF
U7G$2
U1G$2
U4G$2
U3G$2
C11
100nF
H1
2.3mm
H2
2.3mm
H3
2.3mm
H4
2.3mm
Version 0000
TITLE: Luminary CrossFire v1.0.2
Document Number:
REV:
Date: 2006-02-20 23:38:08
Sheet: 1/1